AS 5500

BANKNOTE COUNTER
TECH. MANUAL

2022.09 Version

CONTENTS

§ SPECIFICATIONS OF THE BANKNOTE COUNTER.....1
§ FUNCTION OF THE BANKNOTE COUNTER 2
§ HOW TO OPERATE THE BANKNOTE COUNTER.....5
§ THE OPTIONAL FEATURE 8
§ HOW TO USE THE FEATURE OF UV-DETECTION.....9
§ PRECAUTIONS 11
§ REGULAR MAINTENANCE 11
§TROUBLE SHOOTING 12
§ TECHNICAL DRAWING 17
§ PARTS LIST.....27

ARPEGE SECURITY
359 rue Vanderkindere,1180Bruxelles,Belgique
Email: info@arpege-security.com
www .arpege-security.com

§ SPECIFICATIONS OF THE BANKNOTE COUNTER

MODEL TC-5500 (Desktop) / TC-5500S (Floor Stand)

※ Features

1) Check Mode : Counting of 100 Notes Batched
2) Free Mode : Free Counting
3) Preset Mode : Counting for Batched Number
4) Manual Mode : Start Counting by Manual
5) ACC Mode : Accumulate the Total Notes Counted

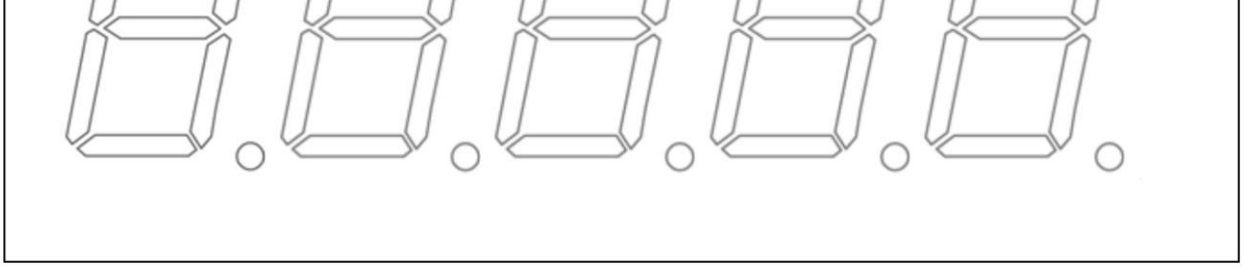

※Specification

	TC-5500 (Desktop)	TC-5500S (Floor Stand)
1) Dimensions(mm) WxDxH	374 x 374 x 260	374 x 374 x 830
2) Net Weight (kg)	25	37
3) Power Supply	110V,AC±10% 60Hz or 220V,AC±10% 50Hz	
4) Power Consumption	330W	
5) Temperature Limits in Use	10° to 40° C	
6) Counting Speed	Approx. 100 Notes per 4 Sec	
7) LED Display	2 Displays	
	Count - 3 digit / ACC - 5 digit	
8) Hopper Capacity (Notes)	Approx. 200	
9) Document Feed Mechanism	Vacuum Type	

※Options

	TC-5500 (Desktop)	TC-5500S (Floor Stand)
ED- External Display	Option	Option
OK- Band Stamping Device	Option	Option
UV- UV-Detection Device	Option	Option

- Specifications are subject to change without notice.

§ FUNCTION OF THE BANKNOTE COUNTER

※ The Control Panel & Function Keys

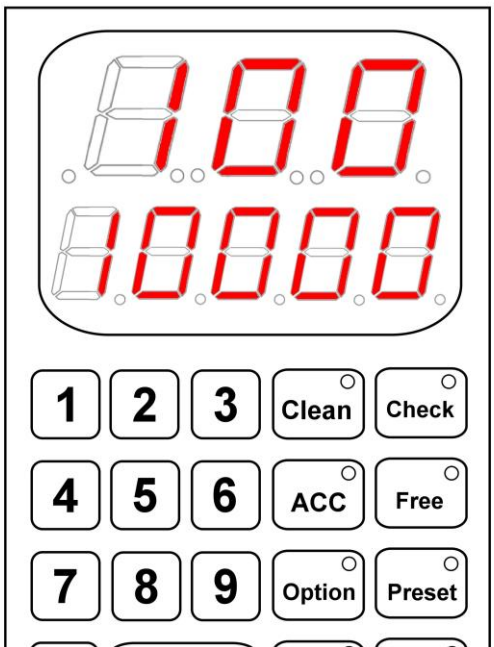

※ The

Display Number

☞ The counting result will show on the LED screen. The lowers part was the accumulated number, it will show counting result when the user selecting this ACC function

※ The **Check** Function Key

☞ This function is designed for counting the banknote for 100 pieces preset. The detector will alarm when the counting result is more or less than 100 pieces after the counting process.

※ The **Free** Function Key

☞ This function is designed for free of counting. So no matter what's the counting result, it will finish the counting process & open the Banknote Clipping Plate automatically.

※ The **Preset** Function Key

☞ This function is designed to fix the number of banknote which be counted. It will count the correct piece as you set. The preset number will be showed at the display screen of the control panel.

※ The **Manual** Function Key

☞ This function is designed for human hand operation. Users have to push the function key to make it work.

※ The **ACC** & **Clean** Function Key

☞ This ACC function is designed for accumulating the total notes counted and it should be effective when ACC selected. Clean Key is for the deleting of counting result in present process and it should be effective when ACC selected.

※ The ✱ Function Key

☞ This function key is designed for UV-Detection. Select this function then this machine can detect counterfeit note. There are 8 different UV band of sensibility for you to select.

§ HOW TO OPERATE THE BANKNOTE COUNTER

※ The **Check** Function:

- ☞ Step 1: Turn on the power switch and the machine will come into the status of Check Mode automatically. The buzzer will alarm and open the banknote holder. The LED display will show the number of “0” for starting the counting processing.
- ☞ Step 2: Putting the banknotes into the banknote holder and forwarding the banknote to touch the starting sensor.
- ☞ Step 3: The machine will count automatically and the counting result will be showed on the LED display.
- ☞ Step 4: The banknote holder will release automatically if the counting number is correct (100).
- ☞ Step 5: The buzzer will alarm if the number is less or more than 100. That means ERROR and the banknote holder will not release. The user should press the button of **Reset** for resetting and release the banknote holder.

※ The **Free** Function:

- ☞ Step 1: Press the button of **Free** to select this function then the buzzer will alarm with the opening of banknote holder. The machine is ready for using now.
- ☞ Step 2: The maximum banknote capacity approx. 200 pieces and you can count in one time. Putting the banknotes into the banknote holder and forwarding the banknote to touch the starting sensor.
- ☞ Step 3: The machine will counting automatically and showed on the LED.
- ☞ Step 4: The banknote holder will release after this counting process.

※ The **Preset** Function :

- ☞ Step 1: Press the button of **Preset** to select this function then the buzzer will alarm with the opening of banknote holder. The machine is ready for using now (The LED display will show the number of “0” for starting the counting processing).
- ☞ Step 2: Select the preset number that you need and this preset number will be showed on the LED display.

- ☞ Step 3: Putting the banknotes into the banknote holder and forwarding the banknote to touch the starting sensor.
- ☞ Step 4: The machine will count automatically. The counting result should be correct as user preset on the LED display.
- ☞ Step 5: The banknote holder will release automatically (wait about 3 sec) after this counting process if this operation is correct.
- ☞ Step 6: The buzzer will alarm if the counting number is less than the preset number. That means ERROR and the banknote holder will not release. The user should press the button of **Reset** for resetting banknote holder.

※ The **Manual** Function :

- ☞ Step 1: Press the button of **Manual** to select this function then the buzzer will alarm with the opening of banknote holder. The machine is ready for using now
- ☞ Step 2: Putting the banknotes into the banknote holder and forwarding the banknote. It will not count automatically, you have to press one more time then the function of starting sensor will be released.
- ☞ Step 3: Press this button again for starting the counting process.
- ☞ Step 4: the counting number will be showed on the LED display after this process.

※ The **ACC & Clean** Function :

- ☞ Step 1: Press the button of **Check**, **Free**, **Preset** or **Manual** to select the counting mode.
- ☞ Step 2: Re-press the **ACC** button after the counting mode selected. (The lower part of LED display will show the number of “0” for starting the counting processing.) It will also show the accumulating number in the LED.
- ☞ Step 3: The ACC feature is using automatically if the counting process is correct. It will not operate if the counting process is incorrect. The **Clean** key is used to delete the present counting result if the user doesn’t want it to be added to the ACC.
- ☞ Step 4: Press again for releasing ACC.

※ The **Self-Diagnosis Test** Function :

Function: This function is designed for checking the system's: 1) Vacuum Pressure, 2) LED display, 3) Spindle Sets, 4) Counter Sets, 5) Motors banknote counting and feeding process.

☞ Step 1: User need to block the holes of Spindle Sets by adhesive plastic tape. And selecting the function key of **0** after power on. The Self-Diagnosis Test will operate automatically. User can push the same key again to turn off this function.

☞ Step 2: During testing mode, user can check by following five parts:

1) **The Vacuum Pressure**: For counting banknotes' air pressure can not be lesser than 480 cmHg. If lesser than this data, then this machine probably will loose air pressure. User need to check the vacuum system included: Vacuum Pump, Pipe System and Filters. Most of time the operator just needs to clean the filters of Pump (E010) and Suction Head (A002.1) only.

2) **The LED Displays**: The LED's numbers will show number from 1 to 999 alternately. If the numbers can't show properly then replace a new one to correct it.

3) **The Spindle Sets**: It can be swirled by the motors and starting vacuum suction counting method.

4) **The Counter Sets**: User need block the hole of Spindle Sets by adhesive plastic tape. Then can see the LED's numbers will show number from 1 to 999. It means Counter Sets is operated normally.

5) **The Motors**: It can detect Motor1 & Banknote Holder is working or not; Motor 2 & Spindle Sets working or not.

§ THE OPTIONAL FEATURE

※ The Stamping Function :

Function: This function is designed for checking the batched banknote of 100 pieces. It will punch a stamping mark (OK) on first banknote if the number of banknote is exactly 100 pieces.

☞ Step 1: Select the function key of **Option** and the function small red light will turn on. That means stamping function now is ready.

☞ Step 2: In the same process as Check mode (Please see the previous explanation). The stamping mark will be punched if the process of counting number is 100 pieces. Otherwise, it would not do anything.

☞ Step 3: Release this stamping function, please press the button again and the small red light will turn off. That means this stamping function is canceled.

※ The External Display:

Function: This function is designed to check the counting result in the remote display. The wire of remote display can be more than 3~6m. It is the helpful tool for customer to monitor the counting result.

※ The **UV-Detection** Function :

Function: This function is designed for detecting the counterfeit banknote. It can be used with the feature of Check; Free; Preset, Manual Mode and ACC feature together.

☞ This is simply started by push the button of ✱ before counting process.

§ How to Use the Feature of UV-Detection

The vast majority of the world's bank notes are printed a high quality, linen-based paper, which has low fluorescence characteristics. Because the majority if counterfeit notes are printed on normal quality papers, which have been bleached and therefore fluoresce, UV detection is normally the most useful method of helping to find forged bills at the speed at which a currency counter operate. This function is designed for checking suspect counterfeit note during counting process.

P.S: Verify function can work with other counting mode: Check, Free, Batch, Manual, Stamp or ADD.

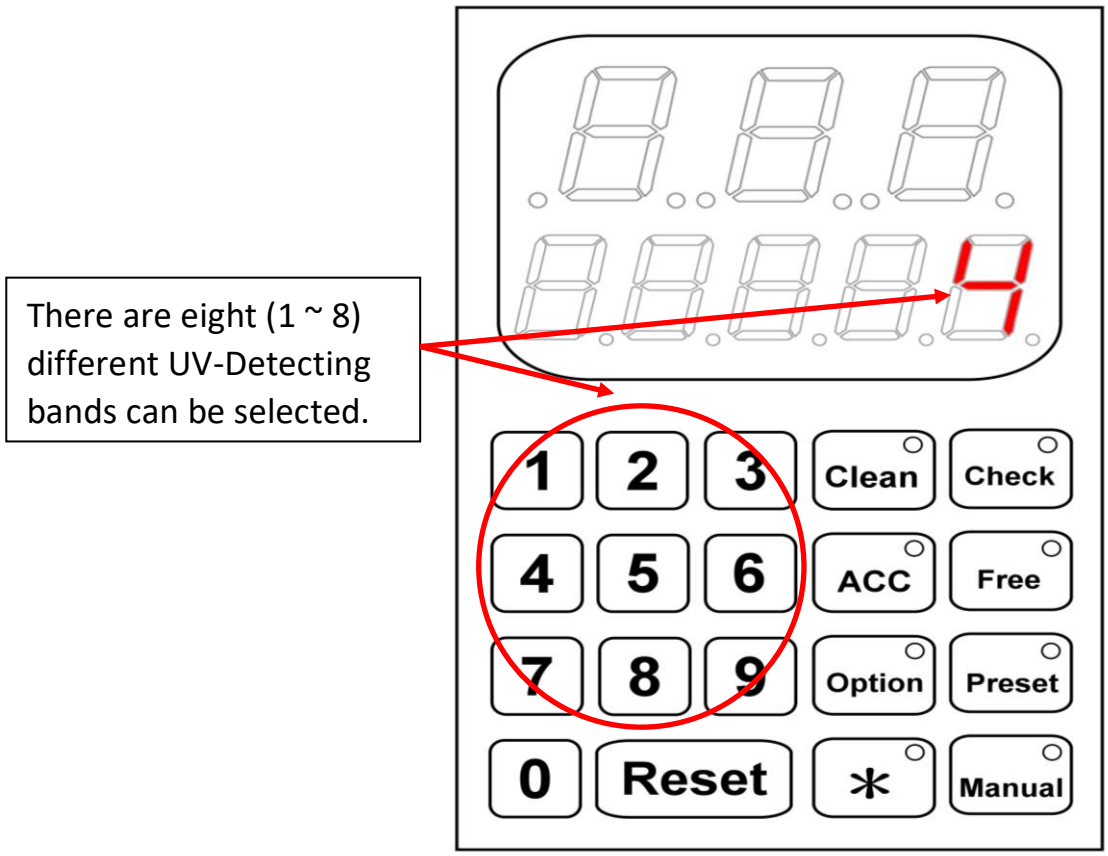

- ☞ Step 1: Turn on the machine and select the UV-Detection feature by push the key of [✱] . The UV-detection band will be made on the band 4 automatically and user can count and test the UV-feature by genuine notes and counterfeit notes.
- ☞ Step 2: Then user can select the band by push the Number Key 1, 2, 3, …,8. The most sensibility program was No. 1; and consequently, the most insensibility was program was No. 8.

☞ Step 3: If the perfectly band, for example band 1 can count genuine note and catch the counterfeit note perfectly then you can use this band for this particular note. Otherwise you must change the band to 2 … 8. (That means the user has eight bands to find the best suitable band for each particular note.)

Note:

Following information was for Technicians Only. Please check the part of previous PC board & UV board graphic chart together.

If this machine can't find out the counterfeit note or miss detect in geniuses banknote. And user also can't find out the suitable sensitivity in 8 different sensibility levels from keypad. Please inform your service engineer to do in following countermeasure.

☞

☞ Step : When technician count this bundle of note, please adjust VR3 at the same time. Turn clockwise (CCW) make the UV sensitivity higher ; turn counter clockwise (CW) to low down the UV sensitivity. User can see the change of parameter in the display after they adjust VR3.

Adjust the VR3 (Voltage Resistant) to change the voltage for suitable UV sensitivity.

1. Clockwise for a higher sensitivity
2. Counter Clockwise for a lower sensitivity.

§ PRECAUTIONS

(1) Please check your AC Voltage; it should be the same as the Voltage specification showed on the back sticker of our Banknote Counting Machine.
(2) Disconnect the AC cord and inform the qualified engineers for repairing our banknote counter if there is any technical trouble or damage on our machine.
(3) Do not use the system in places, which are extremely hot, cold, dusty or humid.
(4) When you are not going to use the system for a long period of time, please disconnect the AC cord.
(5) If the AC cord is broken or damaged, or if the wires are exposed, contact your local agent to replaced or repaired.

§ REGULAR MAINTENANCE

☞ **To clean the cabinet**

Use a soft cloth lightly moistened with mild detergent solution. Do not use strong solvents, such as alcohol, benzene or thinner.

☞ **Regular filters cleaning**

There are two different models of filters in the machine. One is the filters of compressor, which are fixed in front of inlet, and outlet of compressor. The other one is the filters of spindle which are fixed on the top of spindle.

Regular cleaning for the filters of compressor should be every 6 months once and for the filters of spindle is every two months.

§TROUBLE SHOOTING

1. No power enter into the machine

(1) Power supply (B041) was damaged.
☞ Check power supply (B041) and plug.

(2) Fuse was damaged (Fuse is hidden in the 2-in-1 Power Switch D026).
☞ Replace a new fuse.

(3) The cable between pump and power supply was damaged.
☞ Check the plug and cable

(4) Main control board (D031) was damaged.
☞ Check or replace the board.

2. Display screen shows nothing after turn on the machine

(1) The cable of TQU-28 (B006) / TQU-32 (B026.1) / TQU-33 (B027) was damaged.
☞ Check or replacement a new cable.

(2) The Front display board (B005.2) / Rear display board (B024.2) was damaged.
☞ Check or replacement the board.

(3) Main control board (D031) was damaged.
☞ Check or replace the board.

3. The machine didn't function in the process of counting.

(1) Micro switch (C028) was damaged.
☞ Adjust it or replace a new one.

(2) Micro switch set (B013) was damaged.
☞ Adjust it or replace a new one.

(3) Main control board (D031) was damaged.
☞ Check or replace the board.

(4) Proximity sensor set (A034) was damaged.
☞ Adjust it or replace a new one.

(5) PU Belt (A027.1) was loosed or broken.
☞ Replace a new one.

(6) The hole of spindles (A003 / A009) was jam.
☞ Using air compressor to blow out the dust from the spindle filter mesh and clean suction hole; replace a new spindle filter mesh.

(7) Pump (E001) stuck.

☞ Turn off the machine, and use screw driver to troll the pump's fan.

☞ If it still stuck, take off the pump's cup and swirl the pump's fan by tools.

4. Pump does not run or lack of pressure.

(1) Pump (E001) stuck.

☞ Turn off the machine, and use screw driver to troll the pump's fan.

☞ If it still stuck, take off the pump's cup and swirl the pump's fan by tools.

(2) There were too much dust blocked the spindle filter (A002.1).

☞ Using air compressor to blow out the dust from the filter (A002.1); replace a new filter.

(3) Pump filter mesh (E010) blocked.

☞ Clean filter or replace a new filter.

(4) Fitting (A023) much dust blocked

☞ Clean the fitting.

5. Suction head does not move or move too slow

(1) PU Belt (A027.1) was loosed or broken.

☞ Replace a new one..

(2) Pump (E001) stuck.

☞ Turn off the machine, and use screw driver to troll the pump's fan.

☞ If it still stuck, take off the pump's cup and swirl the pump's fan by tools.

(3) Lack of power voltage.

☞ Check your electric voltage was match to our machine.

☞ Check power supply (B041).

6. Membrane keyboard's function key can't work

(1) Membrane keyboard (B003) was damaged.

☞ Replace a new membrane keyboard.

(2) Data cable TQU-28 (B006) was damaged.

☞ Check or replacement a new cable.

(3) Main control board (D031) was damaged.

☞ Check or replace the board.

7. Inaccuracy in counting process

(1) Counter Set (A035) didn't in a perfect adjustment condition.

☞ **Micro adjustment**: adjust counter set screw in counter clock wise (CCW) for lower sensitivity to resolve "more counting" problem or clock wise for higher sensitivity to resolve "miss counting".

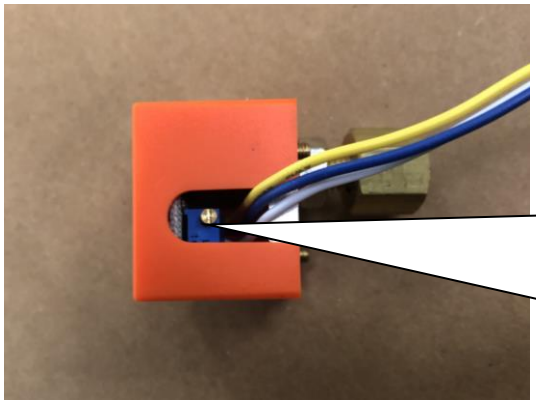

Adjust Counter Set VR503 (Voltage Resistant) to change the voltage for suitable sensitivity of pressure sensor.

1. Counter Clockwise for a lower sensitivity resolve "more counting" problem.
2. Clockwise for a higher sensitivity resolve "miss counting".

☞ **Macro adjustment**: adjust counter set screw (A024) in counter clock wise for quarter circle or less. (Use the oscilloscope or replace a counter)

(2) Fitting (A023) was much dust blocked.

☞ Clean the fitting.

(3) There were too much dust blocked the spindle filter (A002.1).

☞ Using air compressor to blow out the dust from the filter (A002.1); replace a new filter.

(4) Lack of power voltage.

☞ Check your electric voltage was match to our machine.

☞ Check power supply (B041).

(5) Banknote lifting spring (Small extension spring C006) was loosed.

☞ Replace a new banknote lifting spring

(6) The incorrect distance between suction head and banknote blocker (B012).

☞ Adjust the distance between suction head and banknote blocker.

a. Switch off the power, the distance from the position of banknote blocker right side edge to banknote holder edge is 2.5 ± 0.5mm.

b. Switch on the power, the distance from the position of banknote blocker left size edge to banknote holder edge is 1.5 ± 0.5mm.

c. Switch off the power; main roller spindle set face to banknote holder. The distance from main roller spindle set hole edge to banknote blocker right edge is 15~16mm.

d. Check the air blow pipe position should between its second hole and the banknote holder.

e. Check the banknote flipping plate position. To keep away from the main roller

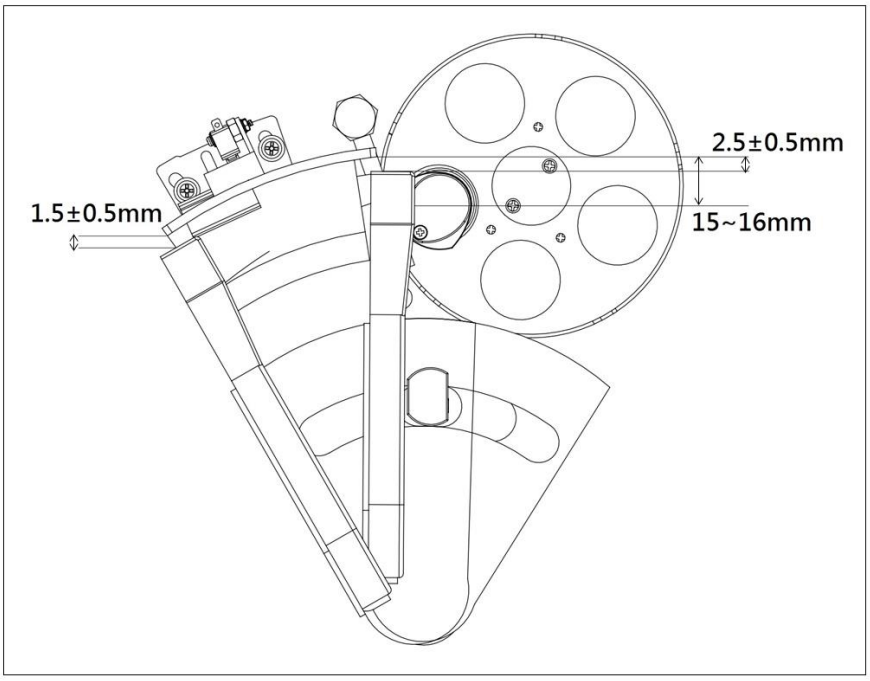

(7) The incorrect air blowing direction.

☞ Adjust blowing pine to blow up at least 1 to 5 banknotes.

a. Putting the bundle of banknotes into banknote holder and forwarding it the limit to touch the starting sensor set. Turn off the power and the banknote holder will clip the banknote automatically.

b. Pull up the **J39** socket on main board and connect direct supply power to vacuum pump. The pump will start running now.

c. Getting loose the screw of center shaft by screw driver and fixing the screw by a wretch then do micro adjustment on the air pressure. The Center shaft unit should 90~95 degree with banknote holder.

8. Banknote holder does not open after turn on power.

(1) Micro switch (C028) was damaged.

☞ Adjust it or replace a new one.

(2) Main control board (D031) was damaged.

☞ Check or replace the board.

(3) Extension spring (C007) was loosed.

☞ Replace a new spring

(4) L Plate (C011 / C012) was damaged.

☞ Replace a new plate.

(5) Pulley (C045) was loosed.

☞ Check and adjust it.

9. The UV detecting function fail to catch counterfeit

(1) User didn't turn on UV function.

☞ Please turn on this function by press [✱] function key. (Wait about 60sec)

(2) The UV tube was too obscure or broken

☞ Replace a new one.

(3) Receiving sensor didn't in a perfect position.

☞ Adjust the position of receiving sensor by well train professional engineers.

(4) The current UV detecting level is not sensitivity enough to catch counterfeit.

☞ User can select suitable sensitivity from 1 ~ 8 by push the Numeric Key 1 , 2, 3, …,8 to catch this counterfeit note.

☞ Adjust variable resistance at the main board.

(5) The geniuses note had blur of fluorescence, so it assumed as fake note.

☞ □ Pick out the strength notes and continuous counting process.

☞

§ TECHNICAL DRAWING

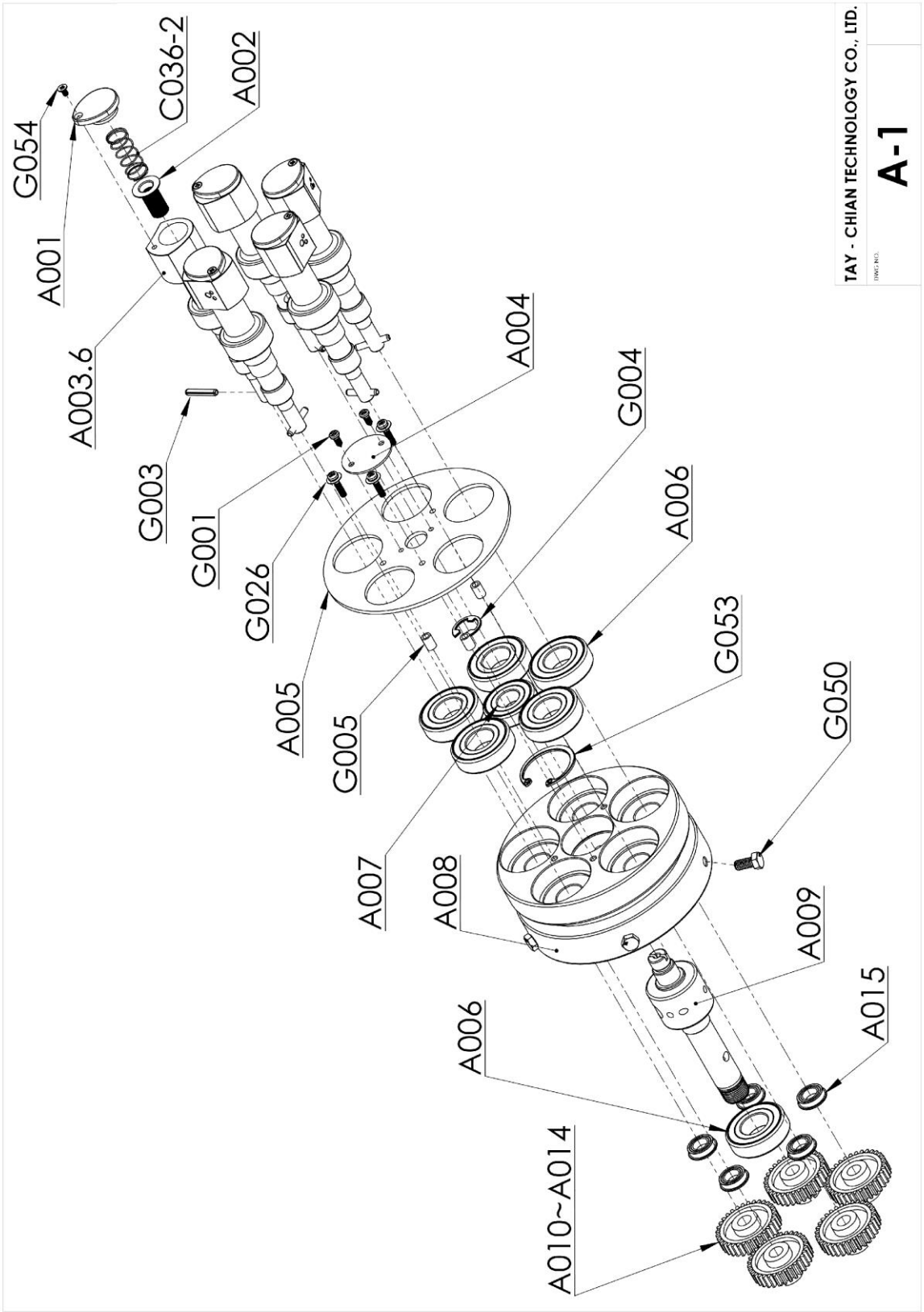

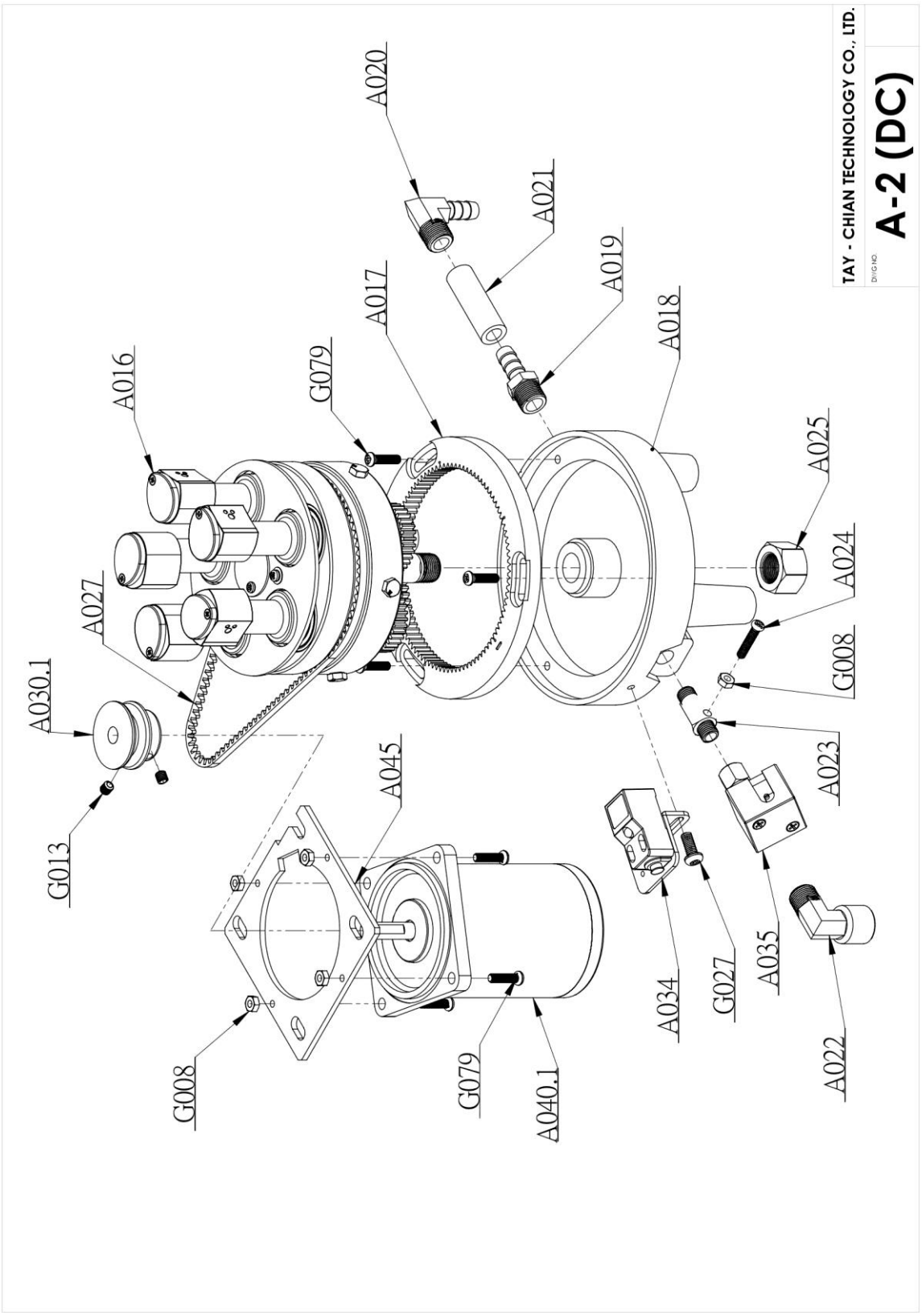
TAY - CHIAN TECHNOLOGY CO., LTD.
A-2 (DC)
DWG NO
A020
A021
A019
A018
A017
G079
A016
A025
A024
A027
G008
A030.1
A023
A045
G013
A034
G027
A035
A022
G008
G079
A040.1

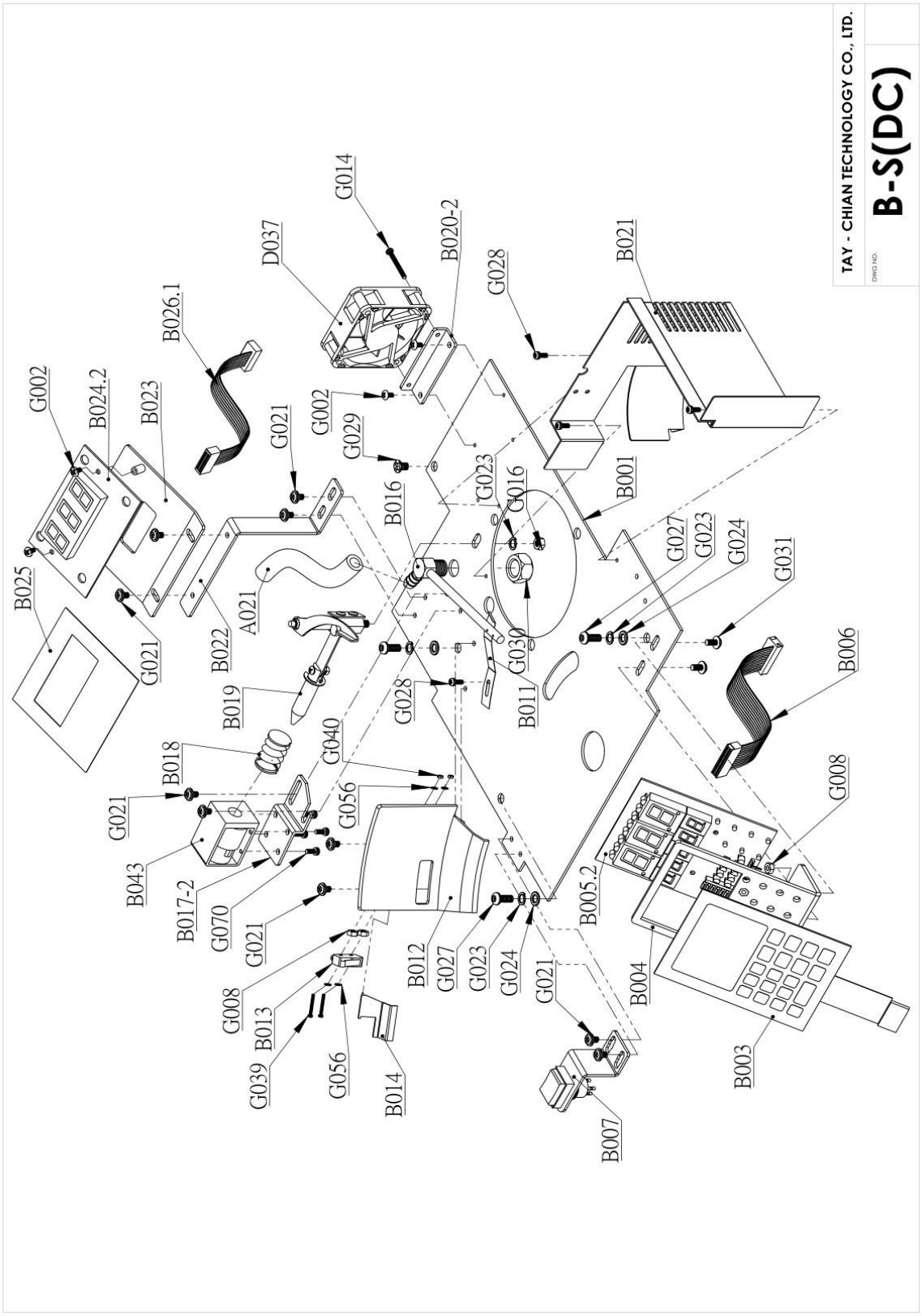
TAY - CHIAN TECHNOLOGY CO., LTD.
DWG NO.
B-S(DC)
G014
D037
B020-2
G028
B021
B026.1
G002
B024.2
B023
G021
G002
G029
G023
G016
B016
B001
G027
G023
G024
G031
B025
A021
B022
G021
G030
B006
B019
G028
B011
B018
G040
G021
G056
G008
B043
B017-2
G070
G021
B005.2
G008
B012
G027
G023
G024
G021
B004
B013
G039
G056
B014
B003
B007

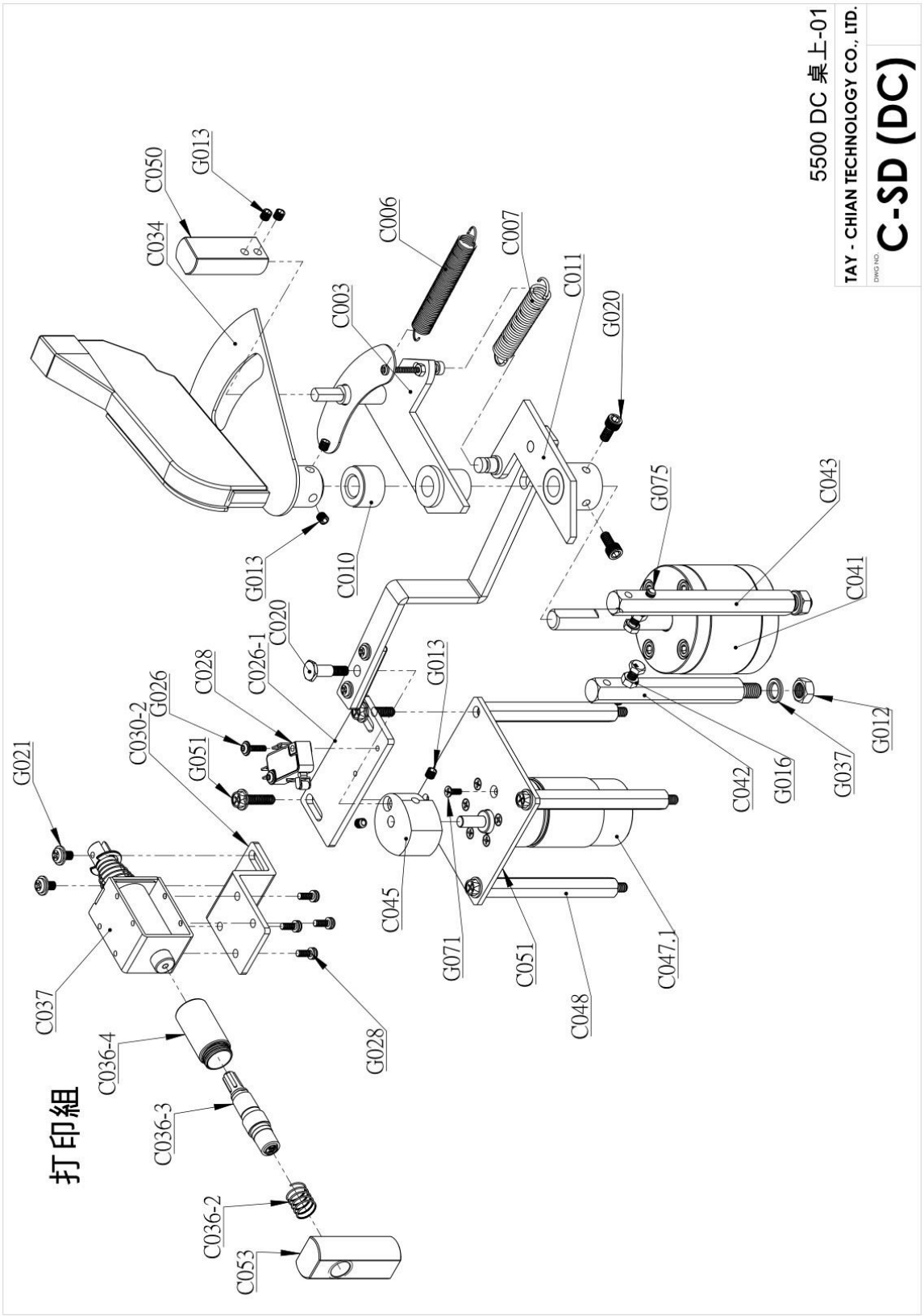
5500 DC 桌上-01
TAY - CHIAN TECHNOLOGY CO., LTD.
DWG NO.
C-SD (DC)
打印組
C050
G013
C034
C006
C007
C011
C003
G020
C010
G013
G075
C043
C041
C020
C026-1
G013
C028
G026
C030-2
G051
G021
C042
G016
G037
G012
C045
G071
C051
C047.1
C048
C037
C036-4
G028
C036-3
C036-2
C053

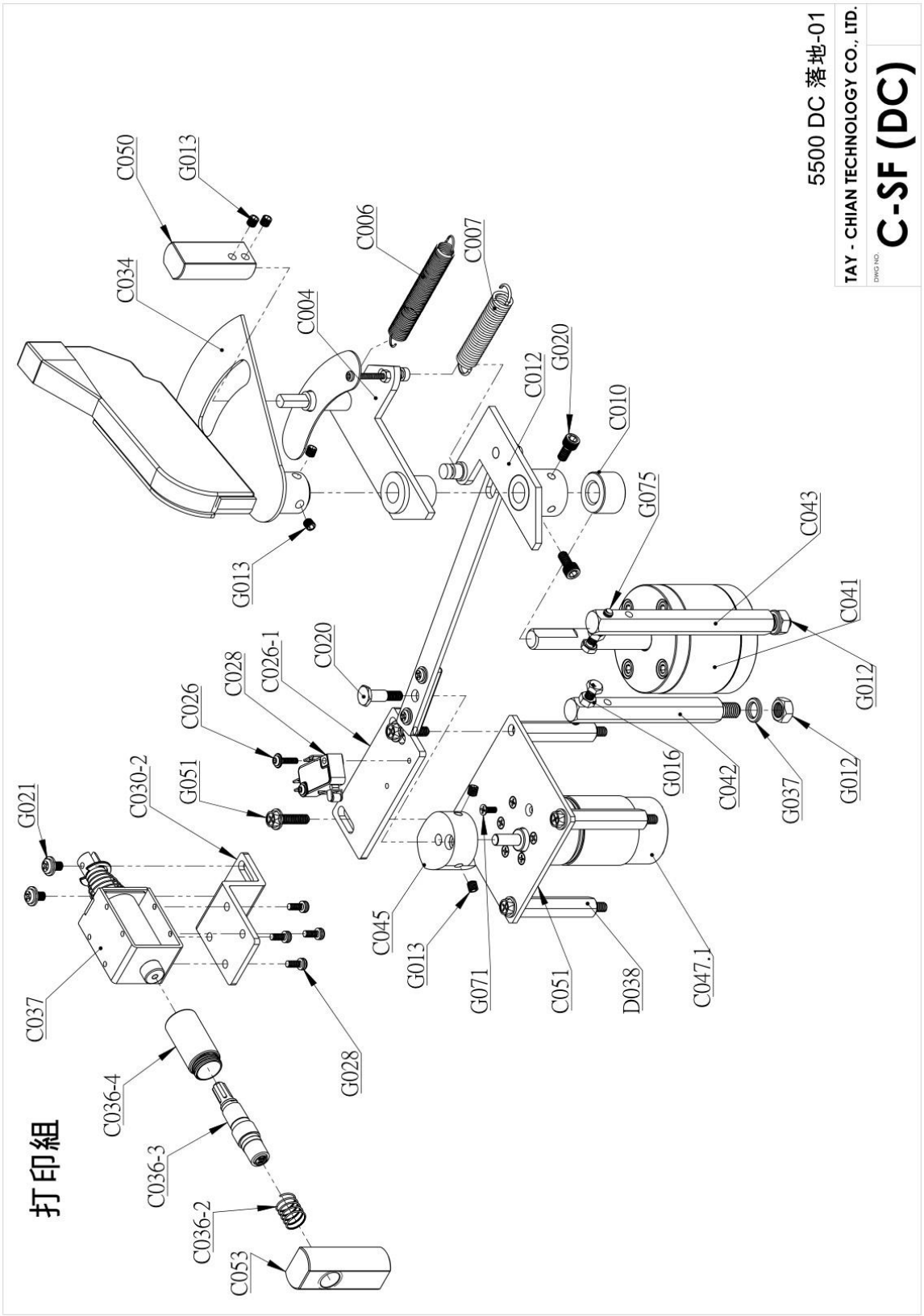
5500 DC 落地-01
TAY - CHIAN TECHNOLOGY CO., LTD.
C-SF (DC)
打印組
C050
G013
C034
C006
C007
C004
C012
G020
C010
G075
C043
C041
G012
C020
C028
C026-1
C026
C030-2
G051
G021
C037
C036-4
C036-3
C036-2
C053
G028
C045
G013
G071
C051
D038
C047.1
G016
C042
G037
G012
G013

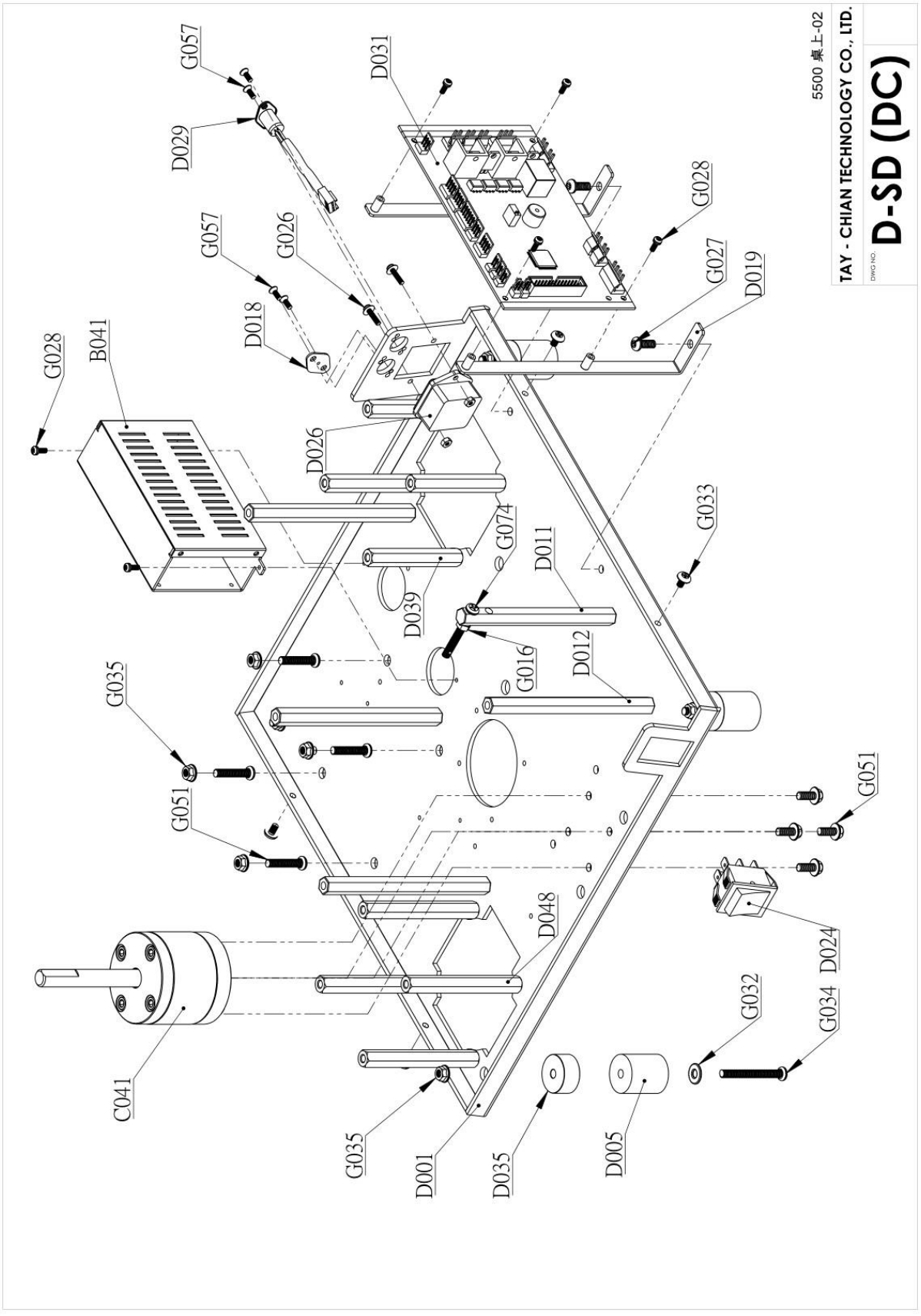
5500 桌上-02
TAY - CHIAN TECHNOLOGY CO., LTD.
DWG NO.
D-SD (DC)
G057
D029
D031
G028
G057
G026
G027
D019
D018
G028
B041
D026
G033
G074
D011
D039
G016
D012
G035
G051
G051
D048
D024
G032
G034
C041
G035
D001
D035
D005

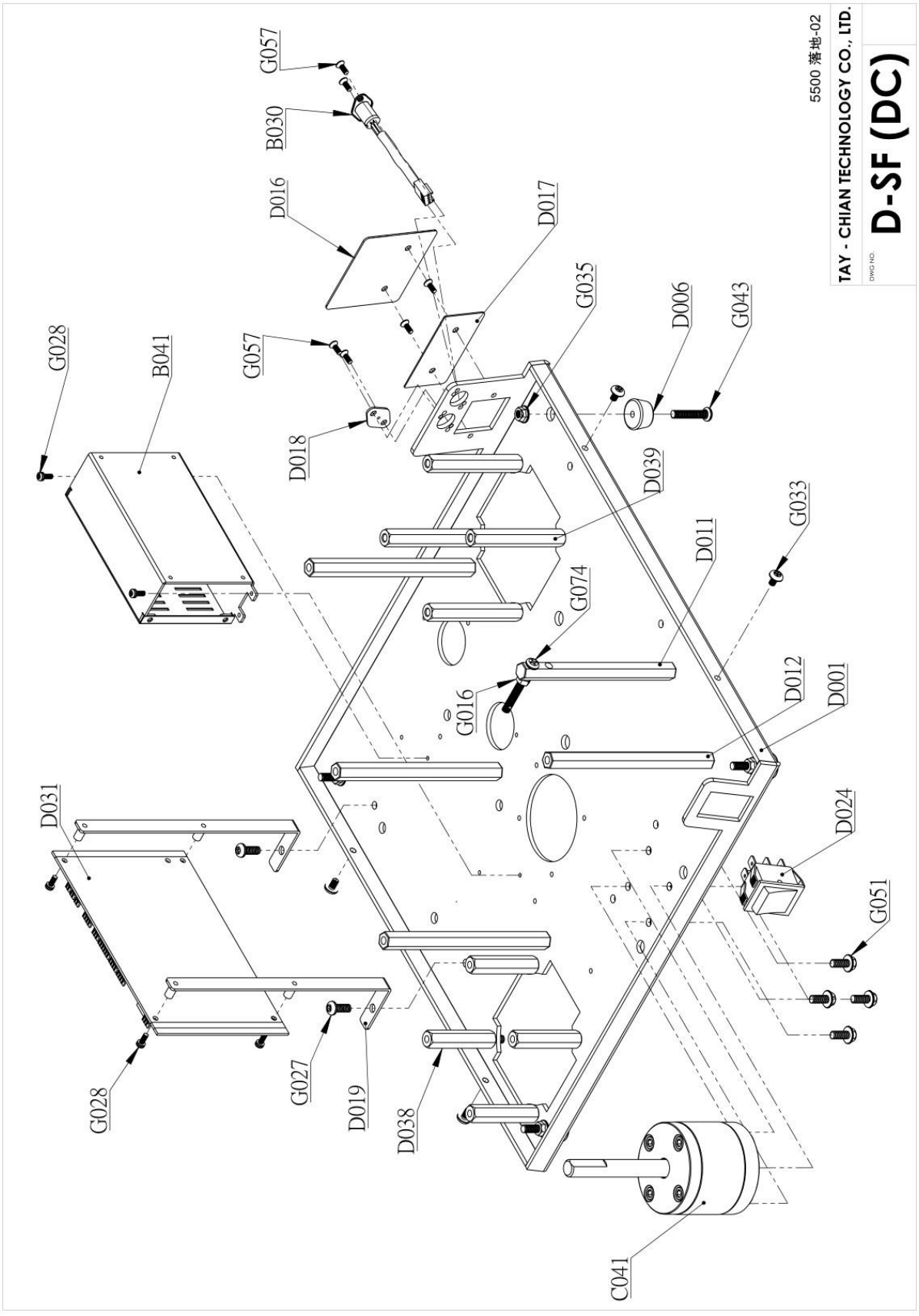
5500 落地-02
TAY - CHIAN TECHNOLOGY CO., LTD.
DWG NO.
D-SF (DC)
G057
B030
D016
D017
G035
D006
G043
G028
B041
G057
D018
D039
G033
D011
G074
G016
D012
D001
D031
D024
G051
G028
G027
D019
D038
C041

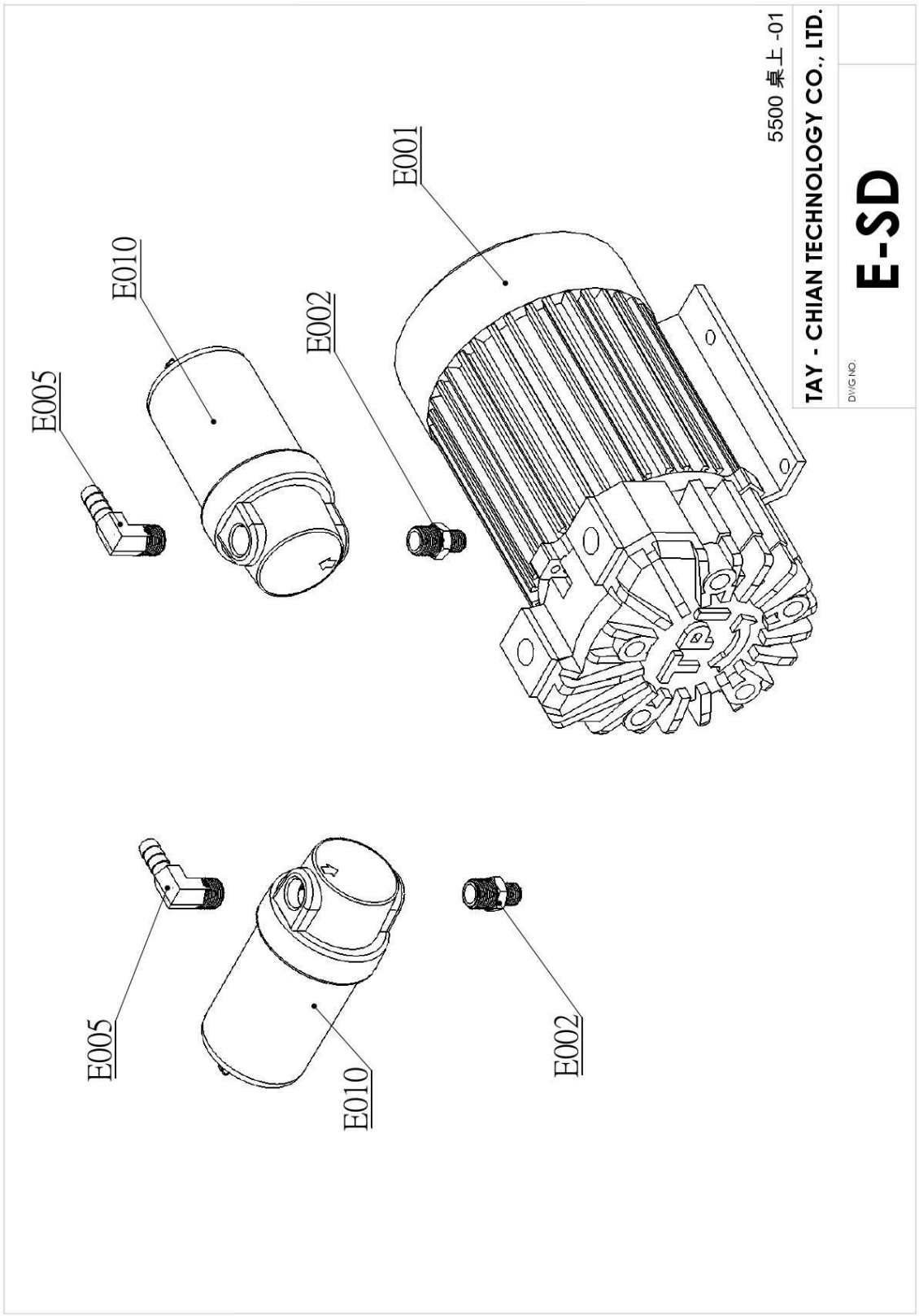
E001
E010
E002
E005
E005
E010
E002
5500 桌上 -01
TAY - CHIAN TECHNOLOGY CO., LTD.
DWG NO.
E-SD

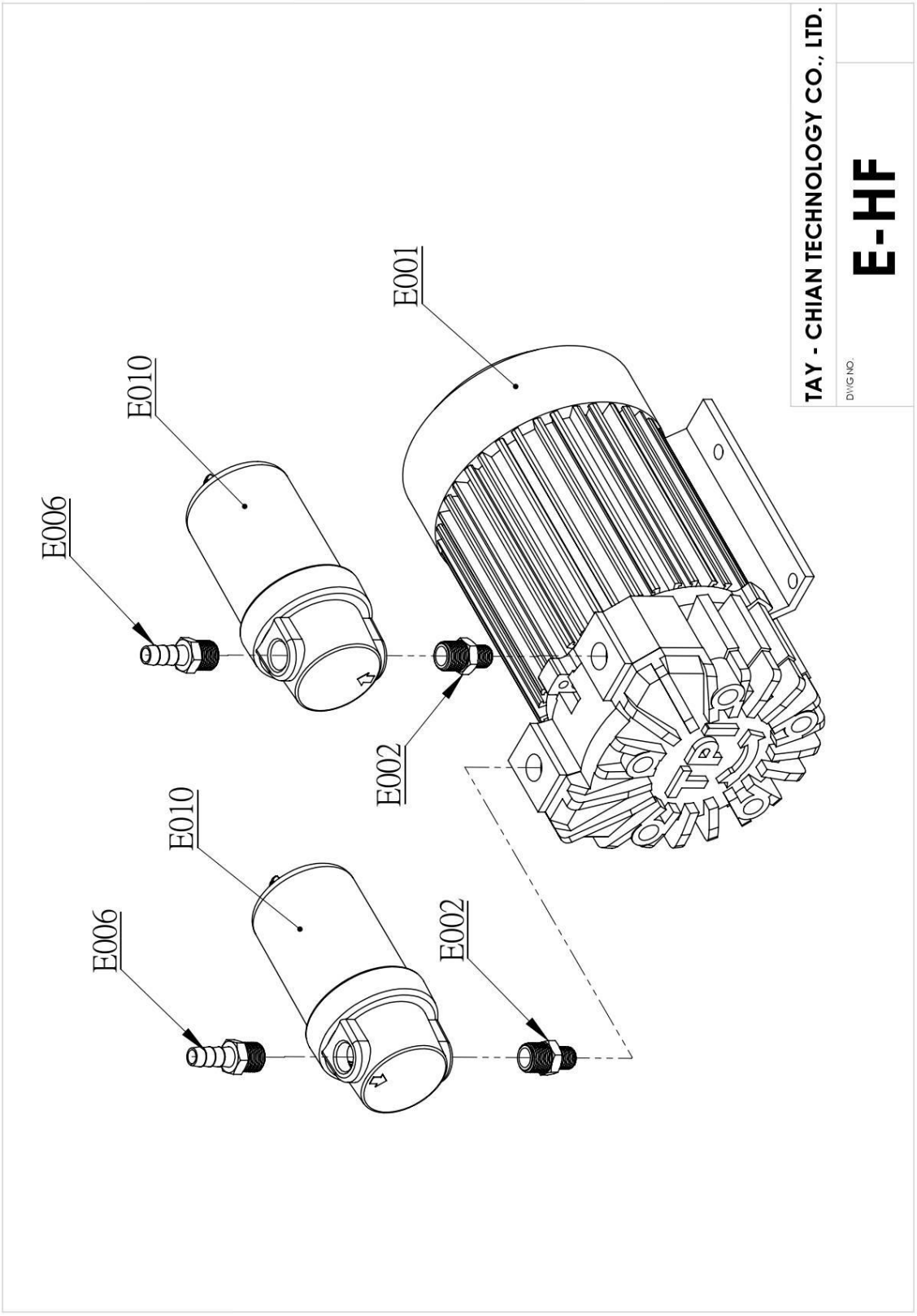
TAY - CHIAN TECHNOLOGY CO., LTD.
DWG NO.
E-HF
E001
E010
E006
E002
E010
E006
E002

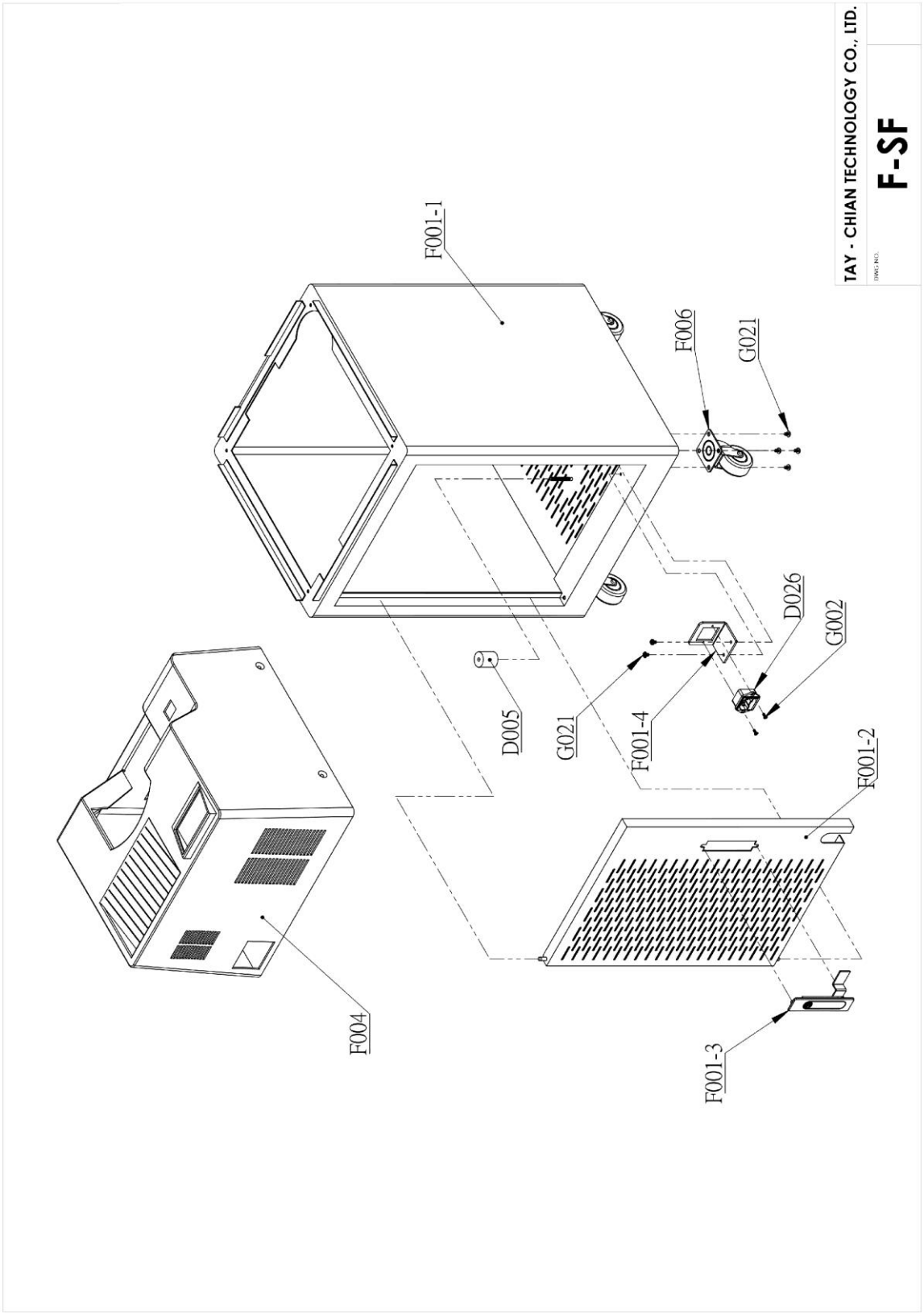
TAY - CHIAN TECHNOLOGY CO., LTD.
F-SF
F001-1
F006
G021
D026
G002
D005
G021
F001-4
F001-2
F004
F001-3

§ PARTS LIST

No.	Part No.	Part Name	
A001	TCG0102215-1	孔塞	Spindle plug
A002.1	TCG0101114	白鐵濾網	Spindle filter mesh
A003.6	TCG0102245	偏心軸(兩截式白色橢圓)	Eccentric shaft
A004	TCG0102212	防塵片 (小)	Dust sheet
A005	TCG0102211	圓盤	Disc flat
A006	TCG0102218	培林 6002 (大)	Bearing 6002
A007	TCG0102219	培林 6001 (中)	Bearing 6001
A008	TCG0102210	點鈔機基座	Main roller base
A009	TCG0102214	中心軸	Center shaft
A010	TCG0102221	齒輪盤(小)1 號	Gear disc 1
A011	TCG0102222	齒輪盤(小)2 號	Gear disc 2
A012	TCG0102223	齒輪盤(小)3 號	Gear disc 3
A013	TCG0102224	齒輪盤(小)4 號	Gear disc 4
A014	TCG0102225	齒輪盤(小)5 號	Gear disc 5
A015	TCG0102234	LF-1480ZZ(馬達級)	Bearing 1480
A016.6	TCG0102246	吸引頭組(白色 2 截)	Main roller
A017	TCG0102202	齒輪盤-大	Roller gear
A018	TCG0102206	三腳座組(68mm)	Roller chassis set (68mm)
A018-1	TCG0102207	三腳座 (68mm)	Roller chassis (68mm)
A019	FB18002005	銅接頭 P017 直管牙 5/16X1/8"	Fitting P017
A020	FB18002001	銅接頭 P061 90°管牙 5/16x1/8"	Fitting P061
A021	A0001	5/16 包紗管	PU hose
A023	TCG0102205	銅接頭 粗調	Fitting for counter set
A024	TCG0102229	不鏽鋼機械牙圓頭 4X20(包含修尖)	Screw 4x20
A025	TCG0102201	吸引頭螺帽	Nut M13x22NI
A027.1	6VC-430	皮帶	V Belt (430)
A030.1	TCG0101319-02	皮帶輪 20(無調速)	Pulley (20)
A034	TCG0510100	近接開關組	Proximity sensors set
A034-1	DA-1805NO	近接開關	Proximity sensors
A034-2	TCG0105101-04	近接開關座(鍍鋅)	Proximity sensors bracket
A035	TCG0192101	小計數器組	Counter set (small)
A040.1	4TC24VGR-3000R	DC 後馬達	DC back motor

No.	Part No.	Part Name	
A045	TCG0101117	DC 後馬達固定板(有刷)(無惰輪)	Back motor fixed plate

No.	Part No.	Part Name	
B001	TCG0100301-06	5500 上底板	Upper plate
B003.1	TCG0101402	薄膜按鍵(中文 灰)	Membrane keypad - gray in Chinese
B003.2	TCG0101403	薄膜按鍵(英文 灰)	Membrane keypad - gray in English
B004	TCG0102601	前顯示器 固定板 80x110x3mm60	Front display fixed plate
B005.2	TCGTAY002P(G)-1	TAY-002P(G)組	Front display board
B006	WA254TQU28	配線線組 TQU-28	Cable accessory TQU-28
B007	TCG0400101	按鍵開關紅蓋組(桌上)	Red reset button set (desktop)
B007-1	JHK16-231R	16mm 矩形按鈕開關 不帶燈 1A1B 自復 紅色	Red reset button
B007-2	TCG0104001	段帶燈固定座	Light bracket
B008	TCG0400102	按鍵開關紅蓋組(落地)	Red reset button set (floorstand)
B011	TCG0102001	彈鈔片 0.3m/m	Banknote flipping plate
B012	TCG0101110	檔鈔板組(黑)	Banknote blocker
B013	TCG0110500	啟動開關組	Start-switch set
B014	TCG0101106-02	檔鈔檔片	Banknote blocker plate
B015	TCG0102101	吹鈔管 (落地式)	Blow pipe (floorstand)
B016	TCG0102102	吹鈔管 (桌上用)	Blow pipe (desktop)
B017-2	TCG0102406	定數打桿固定座 36x60x2mm (鍍鋅)	Lever pole fixed plate
B018	TCG0102409	打桿電磁閥彈簧(鍍鎳)0.6*13*7*29.5	Spring of solenoid valve
B019	TCG0102400-01	打桿組 (TCG0102401~04,07)	Lever pole set
B020-2	TCG0101201	散熱風扇座	Fan bracket for upper plate
B021	TCG0101107-03	DC 吸引頭檔板	Baffle for roller (DC)
B022	TCG0102603	後顯示器支架 72X125X2mmS 型	Rear display bracket
B023	TCG0102602-01	後顯示器 固定板 90x88x2mm20	Rear display fixed plate
B024.2	TCGTAY003D(G)-1	TAY-003D(G)組	Display board

No.	Part No.	Part Name	
B025	TCG0102604	黑紙卡-軋方形簍空 P038(含刀模)9.2x7.8 簍空 6.6x2.8	Black paper
B026.1	WA254TQU32-02	配線線組 TQU-32-01	Cable accessory TQU-32-01
B027	WA254TQU33-01	配線線組 TQU-33-01	Cable accessory TQU-33-01
B034	TCG0102226	外接盒外蓋	Front case of external display
B035	TCG0102227	外接盒本體	Rear case of external display
B036	TCG0102228	外接盒配重片	Iron sheet of external display
B037	TCG0102217	RUBBER RF8-2A	Rubber pad RF8 - 2A
B038.1	TCG0101412	薄膜按鍵(顯示器盒)(黑)	Film for display panel
B039.1	GM-15	顯示器盒固定橡膠	Rubber stopper (15)
B040	WA254TQU34	外接顯示盒線(1.25Housing)	Cable accessory TQU-34
B041	TCM3001001	5500M 電源供應器組	Switch power supply set
B041-1	RP30601S-01	滾筒式電源供應器	Switch power supply
B041-2		DC 電源供應器絕緣片	Switch power supply - insulation film
B041-3	TCT0103004-01	電源供應器外殼	Switch power supply - cover
B041-4	TCT0103005-01	電源供應器內殼	Switch power supply - case
B043	TCM1001001	電磁閥(拉)已加工 24V	Solenoid valve - pull (24V)
B052	WA100TQU01-01	配線線組 8PIN 排線	Cable accessory TQU-01-01
B053	TCG0101113-02	UV 固定架	UV bracket
B054.1	TCG2002200-01	吸引式 UV 組	UV set

No.	Part No.	Part Name	
C003	TCG0040601	上 T 型調整片組(桌上)	T plate set (desktop)
C004	TCG0040602	上 T 型調整片組(落地)	T plate set (floorstand)
C006	TCG0101701	細拉簧 8.5 直徑 x29mm B323	Small extension spring (29mm)
C007	TCG0101601	粗拉簧 1.5x11.4x31x67.5 A2085-04	Extension spring (67.5mm)
C010	TCG0100415	緩衝器墊片 22§x 11§x 14mm 銅	Washer 22x11x14mm
C011	TCG0040501	下 L 型調整片組(桌上)	L plate set (desktop)
C012	TCG0040502	下 L 型調整片組(落地)	L plate set (floorstand)
C020	TCG0100601	連桿 固定螺絲 6 直徑 x27mm(鋅鐵)	Link screw
C026	TCG0250100	1P 啟動開關組	1P micro-switch set

No.	Part No.	Part Name	
C026-1	TCG0102501	微動開關 1P 固定座 33x76x3mm(鍍鋅)	1P micro-switch fixed plate
C028	MS01250026	BMN2-0505D 250V/5A 12mm 100gf	Micro-switch 0505D (100g)
C029	TW-1	電晶體墊片	Transistor washer
C030-2	TCG0103507	打印組電磁閥固定座	Solenoid valve bracket
C034	TCG0010022	夾鈔板組(調白細銀織紋)	Banknote gripper set
C036		夾鈔桿打印組	Banknote gripper lever set (stamp)
C036-2	TCG0103503	彈簧 0.6*ID10*4.5*15(SUS304/右向/閉合不磨平)	Banknote gripper lever - spring
C036-3	10BLU-1	標準型修正章 6mm 黑殼圓形(紅色墨水/OK 有外圈)	Banknote gripper lever - OK stamp
C036-4	TCG0100918-01	緬甸打印固定螺絲	Banknote gripper lever - stamp cover
C037	TCM1001002	電磁閥(推)已加工 24V	Solenoid valve - push (24V)
C041	TCG0100401-01	圓形緩衝器	Buffer chassis set
C042	TCG0101802	圓形緩衝器六角鐵柱 95.4x13mmx12	Hex rod (95.4mm)
C043	TCG0101803	圓形緩衝器六角鐵柱 114.4x13mmx12	Hex rod (114.4mm)
C045	TCG0100502	DC 馬達凸輪	Cam (DC)
C047.1	RB350120-30NA1R	DC 前馬達	Front motor (DC)
C048	TCG0101814	六角鐵柱 86	Hex rod (86)
C050	TCG0100920-01	緬甸夾鈔桿上段(無打印)	Banknote gripper lever
C051	TCG0101108	5500 DC 前馬達固定板	Front motor fixed plate
C053	TCG0100919-01	緬甸夾鈔桿上段(有打印)	Banknote gripper lever (stamp)

No.	Part No.	Part Name	
D001	TCG0100201-10	5500 下底板	Bottom plate
D005	TCG0103203	圓柱型橡膠腳墊	Rubber stopper (large)
D006	TCG0103202	橡膠腳墊 D20xD16x11mm(下底板用)	Rubber stopper (small)
D011	TCG0101810	六角鐵柱 116x 124 mm x 10 § 鍍鋅	Hex rod (116mm)
D012	TCG0101801	六角鐵柱 125 x 133 mm x 10 §(鍍鋅	Hex rod (125mm)

No.	Part No.	Part Name	
D015.3	BFS-MFG-15A(PF)	保險絲 5*20mm 快斷 UL,CSA	Fuse (15A)
D015.4	BFS-MFG-7A(PF)	保險絲 5*20mm7A 快斷	Fuse (7A)
D016	TCG0101551-01	塑膠外殼檔片方型	Blocker of power socket (square)
D017	TCG0101553	長方形檔片	Blocker of power socket (rectangle)
D018	TCG0150100	上蓋附件	Cover for power socket
D019	TCG0103101	電路控制板支架 167x10x3mm	Circuit board bracket
D024	JS608FB-0-G/W-2	電源開關(綠)JS608FB-0-G/W-2	Rocker switch (green)
D026	BRI-3013(JR)	二合一開關	2-IN-1 Power switch
D029	WA254TQU23-01	配線線組 TQU-23-01	Cable accessory TQU-23-01
D030	WA254TQU29-01	配線線組 TQU-29-01	Cable accessory TQU-29-01
D031	TCGTAY001C-1	TAY-001C 電路板組	Circuit board (TAY-001C)
D035	TCG0103201	增高腳墊	Rubber foot pad
D037	CC6025S24H	散熱風扇 24V	Fan (24V)
D038	TCG0101807	六角鐵柱 50	Hex rod (50)
D039	TCG0101813	六角鐵柱 70	Hex rod (70)

No.	Part No.	Part Name	
E001.1	VP-130-1	PUMP 110V	Pump (110V)
E001.2	VP-130-2	PUMP 220V	Pump (220V)
E002	FB18002004	銅接頭 P011 直雙外牙 1/4x1/8"	Fitting P011
E005	FB18002002	銅接頭 P063 90°管牙 5/16x1/4"	Fitting P063
E006	FB18002006	銅接頭 P018 直管牙 5/16X1/4"	Fitting P018
E010	TCG0108000	過濾杯組	Filter set (short)
E011.1	VP-101(110V)	PUMP(110V)	Pump (110V)
E011.2	VP-101(220V)	PUMP(220V)	Pump (220V)

No.	Part No.	Part Name	
F001-1	TCG0103301-05	5500 箱體(白)	Bottom box
F001-2		5500 箱體門板	Bottom box - door
F001-3	TCG0103301-01A	門板把手	Bottom box - handle
F001-4	TCG0103300-L	底箱 L 型附件	Bottom box - L parts

No.	Part No.	Part Name	
F004	TCG0101502	塑膠外殼 370x370x260mm TC-5500	Plastic cover
F006	LP-50TPR	方轉輪	Wheel

No.	Part No.	Part Name	
G001	SC18000308	PTS-1 3x8NI	Screw PTS-1 M3x8NI
G002	SC13000306	TMS M3x6NI	Screw TMS M3x6NI
G003	PIN2500018	PIN 2.5X18	PIN 2.5x18
G004	SC12000800	E-Ring M8BK	E-ring M8BK
G005	3-7.5	圓體間隔柱	Round spacer
G008	SC07000407	NUT M4x7NI	Nut M4x7NI
G010	SC02000520	外六角螺絲 W M5x20Y	Hex screw W M5x20Y
G011	SC07000610	NUT M6x10NI	Nut M6x10NI
G012	SC07000812	NUT M8x12NI(5.7T)	Nut M8x12NI
G013	SC01000505	止付螺絲 M5x5BK	Socket screw M5x5BK
G014	SC06000330	圓頭螺絲 PMS M3x30NI	Screw PMS M3x30NI
G015	SC07000306	NUT M3x6NI	Nut M3x6NI
G016	SC07000508	NUT M5x8NI	Nut M5x8NI
G018	SC10721308	PW 7.2x13x0.8NI	Washer 7.2x13x0.8NI
G019	SC12000500	E-RING M5NI	E-ring M5NI
G020	SC03000510	內六角螺絲 M5x10BK	Hex screw M5x10BK
G021	SC05000406	ISO/W M4x6I	Screw ISO W M4x6NI
G023	SC11058501	SPW 5∮x8.5∮x1mmNI	Spring washer 5x8.5x1NI
G024	SC10521001	PW 5.2x10x1NI	Washer 5.2x10x1NI
G026	SC05000312	ISO/W M3x12NI	Screw ISO W M3x12NI
G027	SC06000512	PMS M5x12BK	Screw PMS M5x12BK
G028	SC16000308	圓頭螺絲附華司 PMS/SPW M3x8NI	Screw PMS SPW M3x8NI
G029	SC08000506	FMS M5x8Y	Screw FMS M5x8Y
G030	SC07001200	NUT M12xP1.5Z	Nut M12xP1.5Z
G031	SC05000408	ISO/W M4x8NI	Screw ISO W M4x8NI
G032	SC10051301	PW 5x13x1NI	Washer 5x13x1NI
G033	SC08000412	FMS M4x12BK	Screw FMS M4x12BK
G034	SC06000545	PMS M5x45NI	Screw PMS M5x45NI
G035	SC20000500	螺絲-法蘭螺帽 M5BK	Nut M5BK
G036	SC02000816	外六角螺絲 M8x16Z	Hex screw M8x16Z

No.	Part No.	Part Name	
G037	SC11081315	SPW 8∮x13∮x1.5Z	Spring washer 8x13x1.5Z
G038	SC10822215	PW 8.2x22x1.5Z	Washer 8.2x22x1.5Z
G039	SC06000215	PMS M2x15NI	Screw PMS M2x15NI
G040	SC07000200	螺母 NUT M2NI	Nut M2x4NI
G041	SC12000900	E-RING M9NI	E-ring M9NI
G042	SC05000315	ISO/W M3x15NI	Screw ISO W M3x15NI
G043	SC06000525	PMS M5x25NI	Screw PMS M5x25NI
G048	SC11061201	SPW 6∮x12∮x1mm	Spring washer 6x12x1NI
G050	SC02000510	外六角螺絲 M5x10NI	Hex screw M5x10NI
G051	SC02000512	外六角螺絲/W M5x12Y	Hex screw M5x12Y
G052	SC17000406	螺絲 TTS-1 M4x6NI	Screw TTS-1 M4x6NI
G053	R-28 BK	止輪	E-ring R28BK
G054	SC08002505	FMS M2.5x5BK	Screw FMS 2.5x5BK
G056	SC10220505	PW 2.2x5x0.5NI	Washer 2.2x5x0.5NI
G057	SC08000308	FMS M3x8NI	Screw FMS M3x8NI
G061	SC13000320	TMS M3x20NI	Screw TMS M3x20NI
G062	WS3-1.5	尼龍華司 WS3-1.5	Nylon washer WS3-1.5
G071	SC08000306	FMS M3x6NI	Screw FMS M3x6NI
G074	SC06000540	PMS M5x40BK	Screw PMS M5x40BK
G075	SC02000525-1	外六角螺絲 M5x25I	Hex screw M5x25I
G079	SC05000412	ISO/W M4x12NI	Screw ISO W M4x12NI
G081		門閂螺絲	Latch screw
G082		門閂螺絲墊圈	Latch screw washer

No.	Part No.	Part Name	
H004	WA396TQU06	配線線組 TQU-06	Cable accessory TQU-06
H005	WA396TQU07	配線線組 TQU-07	Cable accessory TQU-07
H007	WA06PTQU10	配線線組 TQU-10	Cable accessory TQU-10
H008	WA06PTQU11	配線線組 TQU-11	Cable accessory TQU-11
H010	WA254TQU19	配線線組 TQU-19	Cable accessory TQU-19
H011	WA254TQU20	配線線組 TQU-20	Cable accessory TQU-20
H015	WA254TQU26	配線線組 TQU-26	Cable accessory TQU-26
H040	WA396TQU61	配線線組 TQU-61	Cable accessory TQU-61
H041	WA396TQU62	配線線組 TQU-62	Cable accessory TQU-62
H042	WA254TQU63	配線線組 TQU-63	Cable accessory TQU-63
H043	TCT0109017	開關電源接線	Cable for rocker switch

No.	Part No.	Part Name	
H061	P0251	P/N:RESET 3M 背膠	Sticker (reset)
H082	TCG0103004	壓克力面板(茶色透明)	Acrylic panel
H091	A0003	管束	Hose clamp
H098	P0226	104 電容	104 Capacitor